LIFT GATE 90

CANCELLO PEDESTRIAN 90
GATE FOR PEDESTRIAN 90
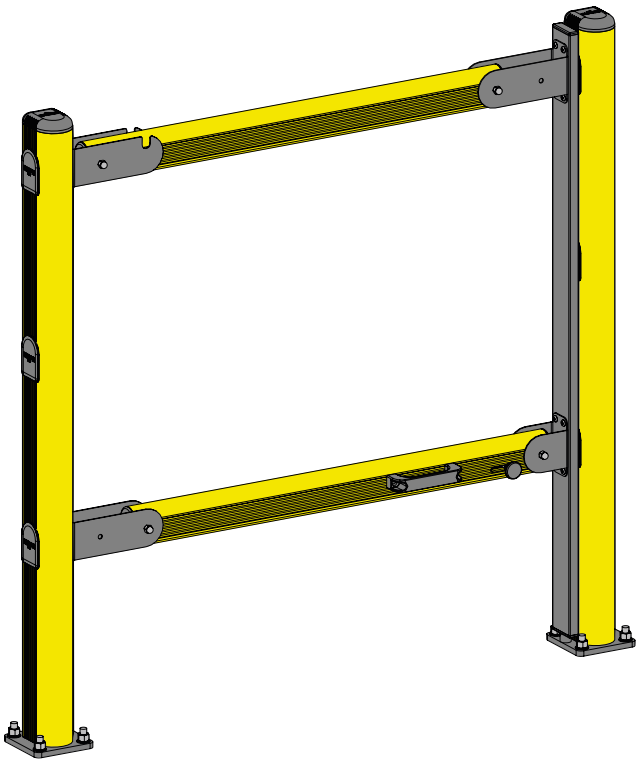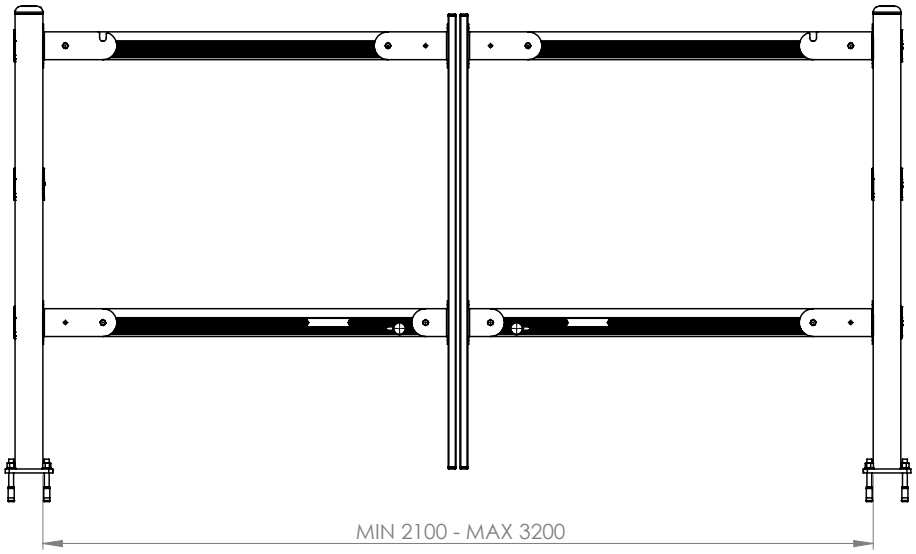
LIGHT LOAD / FOR HANDPALLET TRUCKS